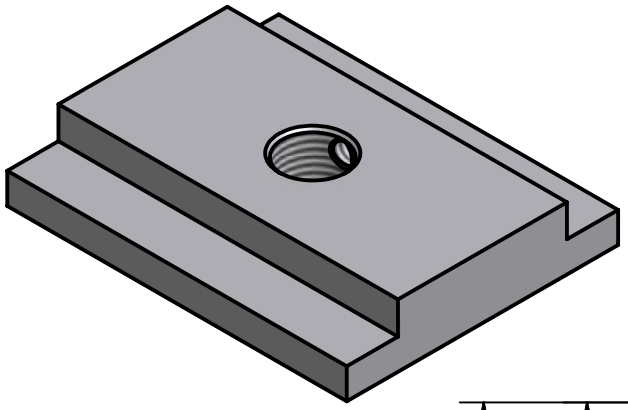

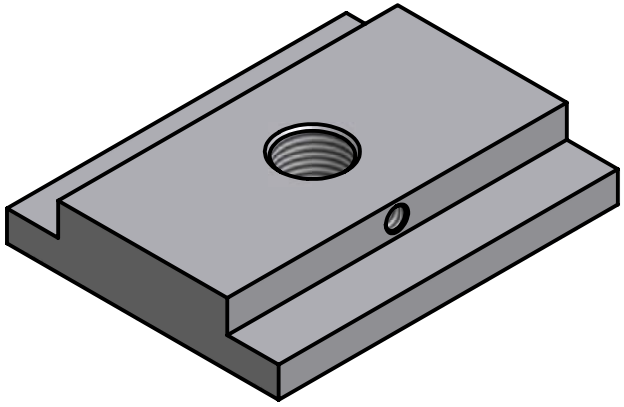

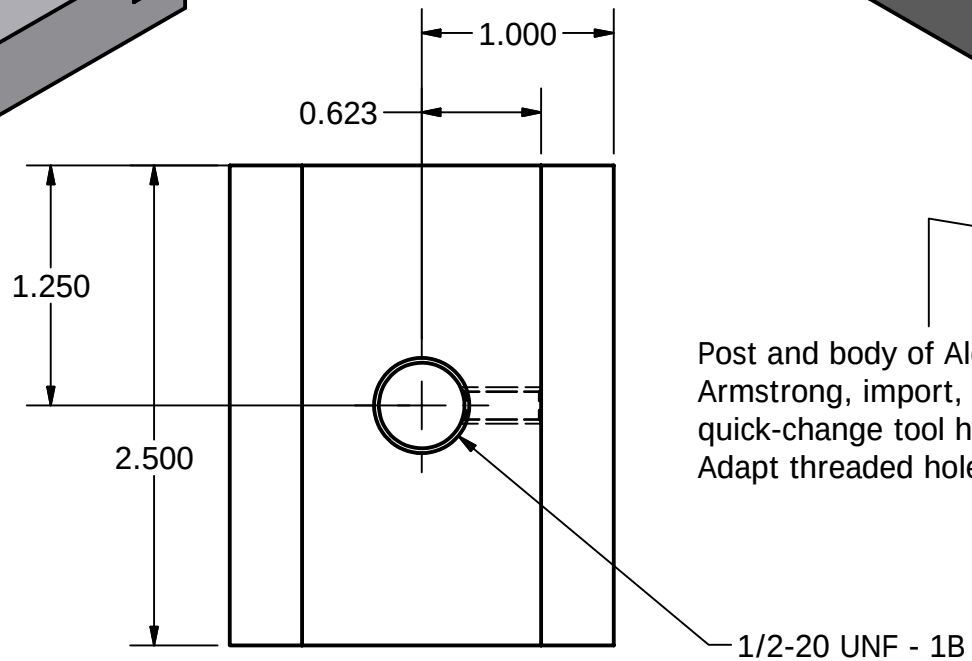

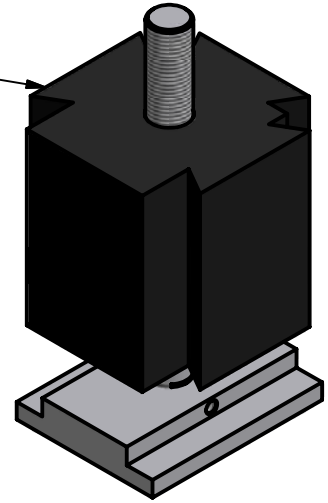

Post and body of Aloris, Armstrong, import, etc., quick-change tool holder. Adapt threaded hole to fit post.

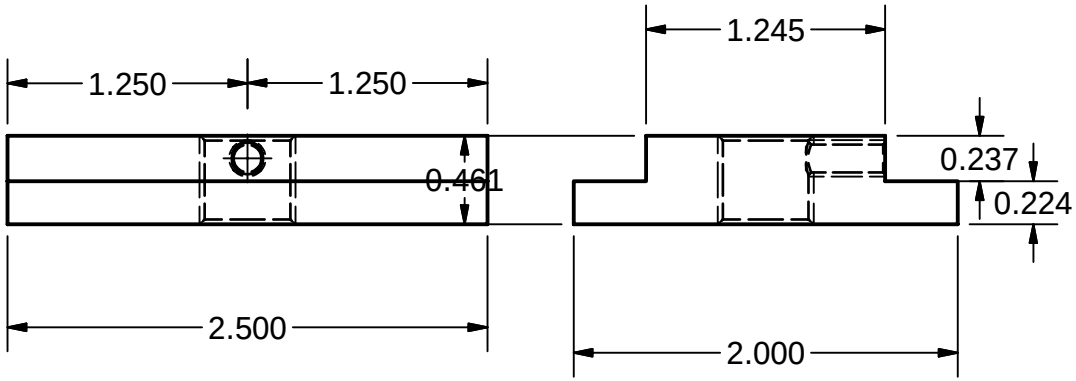

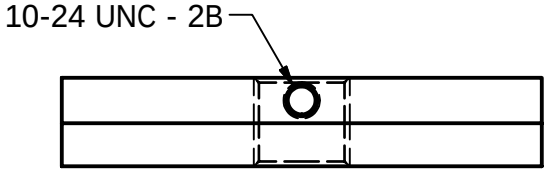

Richard J Kinch, PhD -- Palm Beach County, Florida USA -- http://www.truetex.com
12x36 Lathe T-slot Base.idw