Digital Camera Microscope Adapter
Video Camera Microscope Adapter

For C-mount instruments and 30mm eyetubes

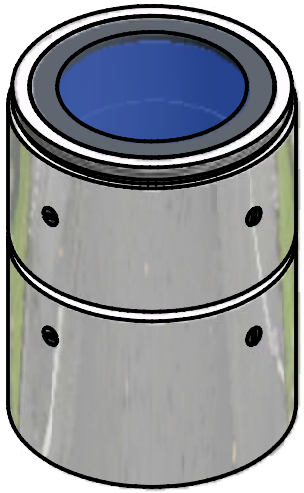

C-MOUNT VERSION

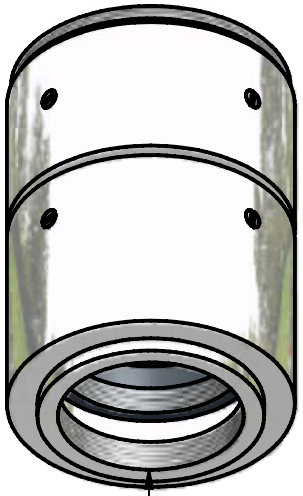

C-MOUNT VERSION

C-mount standard receptacle
(1"-32 UN 2A thread)

EXPLODED VIEW OF ASSEMBLY

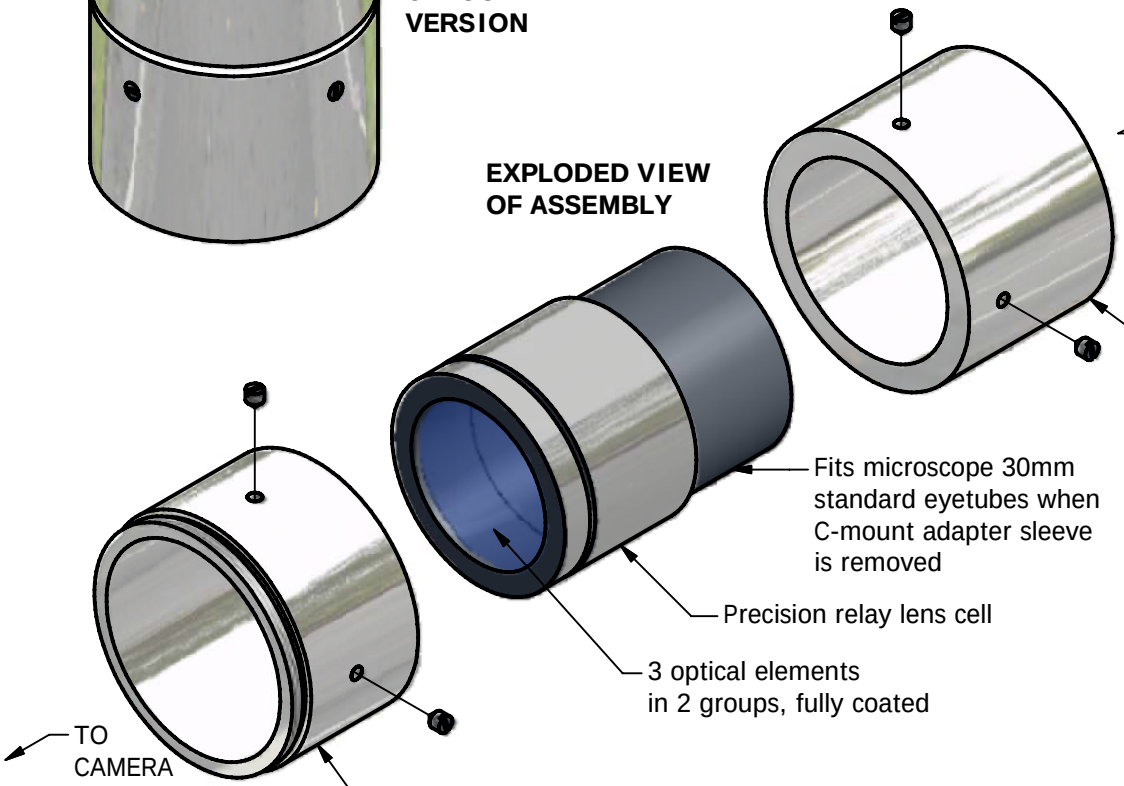

Loosen setscrews and move this sleeve if needed to set camera parfocality with the C-mount instrument

Loosen setscrews and move this sleeve to set coupling distance to eliminate vignetting in the camera view.
Also permits rotational alignment for C-mount applications.

30MM EYETUBE VERSION

OVERALL LENGTH: 2.1 in / 53mm
DiAMETER: 1.5in / 38mm

Richard J Kinch, PhD -- Palm Beach County, Florida USA -- http://www.truetex.com
C-mount_afocal_adapter.idw