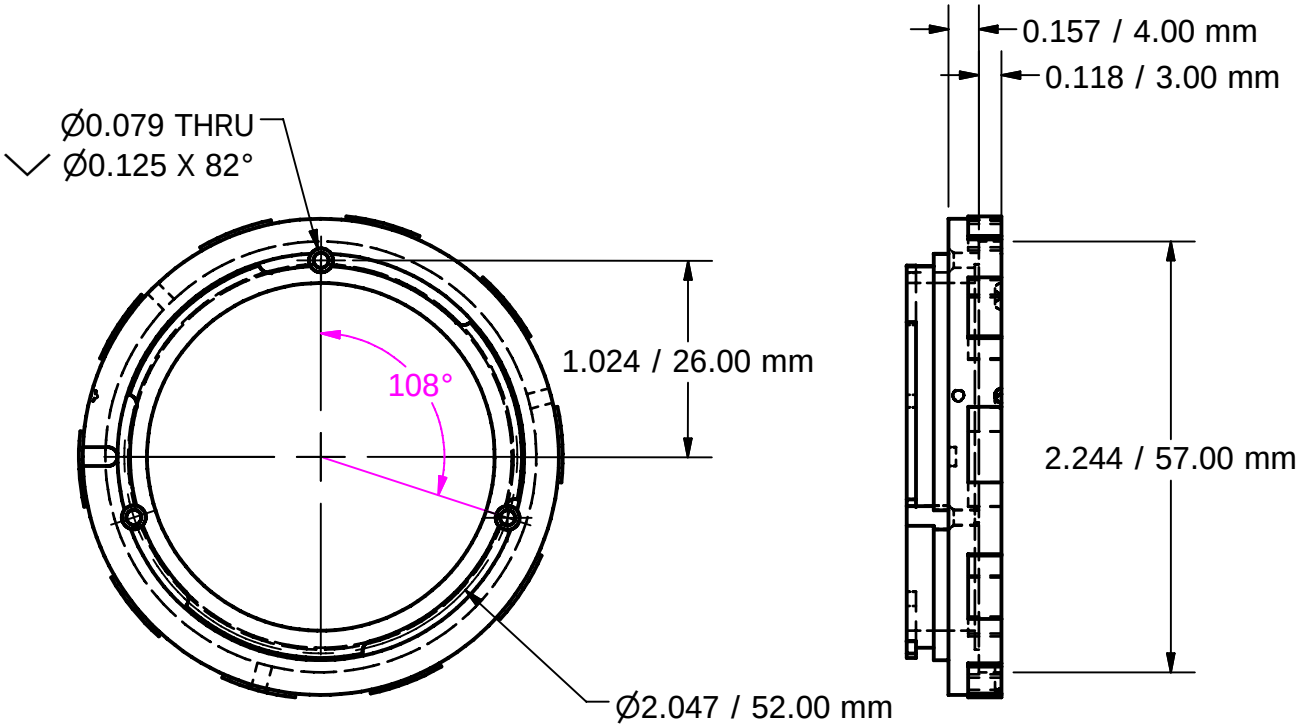

Richard J Kinch, PhD -- Palm Beach County, Florida USA -- http://www.truetex.com
Tokina_RMC_500mm_EF_adapter.idw