REV NO.	DRAWING NUMBER	
51	M	SRF3736-4983-84-5-56BC-CU

REV NO.	REVISION	DATE	REVISION NOTICE	CHG'D BY	CHK'D BY
51	NEW SPEC FORMAT FOR NAMEPLATE	11-8-97	22484	DDF	

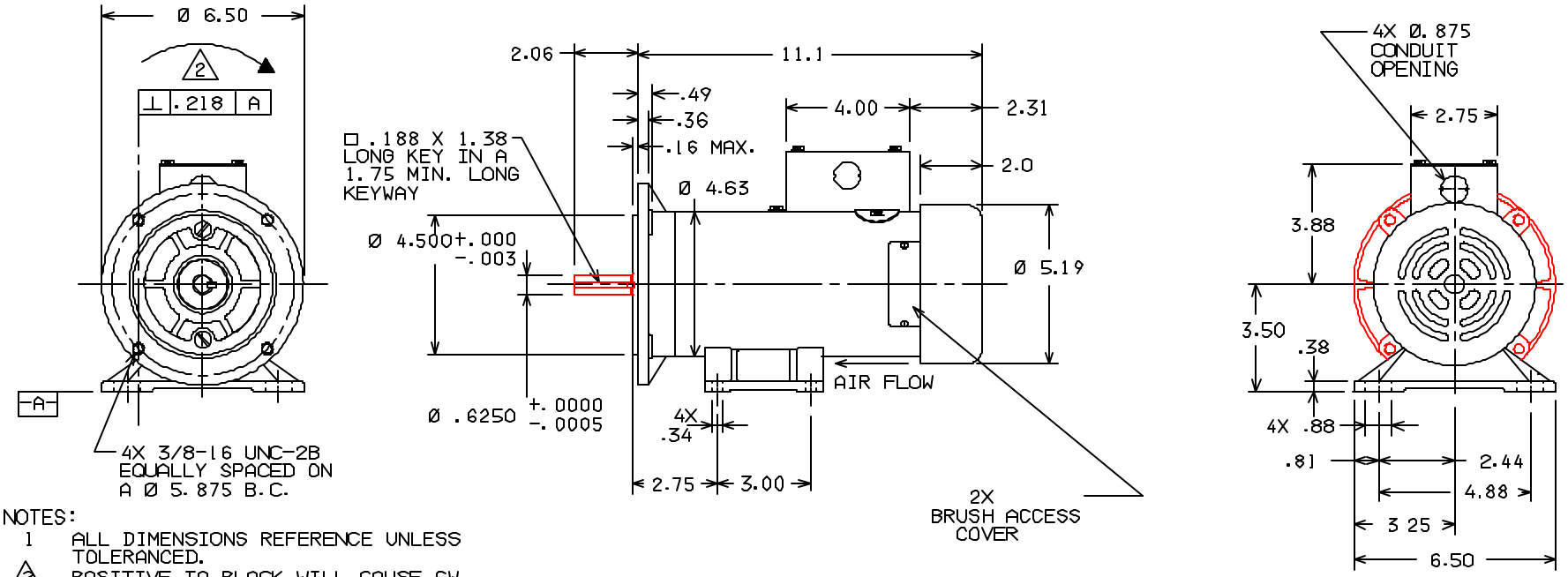

NOTES:

1. ALL DIMENSIONS REFERENCE UNLESS TOLERANCED.
2. (2) POSITIVE TO BLACK WILL CAUSE CW ROTATION FROM SHAFT END.
3. (3) REAR END ACCEPTS TACHOMETER ADAPTER KITS:
   40PA54-36/37-TEFC-S(FOR SERVO-TEK MODEL NO. SA-757A
   40PA60-36/37-TEFC-G(FOR GE MODEL NO. 5PY)
4. UL RECOGNIZED (E61960 AND E103510) AND CSA CERTIFIED (LR43477).

VOLTAGE	180 VDC
HORSEPOWER	3/4
RPM	1750
AMPERES	3.8
CONTINUOUS DUTY	
PERMANENT MAGNET FIELD	
CLASS H INSULATION	
BALL BEARINGS	

SCALE 5/16	THIRD ANGLE PROJECTION	DRAWN	CRH	11-21-95	RELEASE NO. / REPLACES
DO NOT SCALE PRINT		CHECK			MR-3830 / FGS2525

THIS DRAWING COVERS A PROPRIETARY ITEM AND IS THE PROPERTY OF PACIFIC SCIENTIFIC MOTOR & CONTROL DIVISION.
THIS DRAWING IS NOT TO BE COPIED OR USED WITHOUT THE APPROVAL OF PACIFIC SCIENTIFIC.

PACIFIC SCIENTIFIC — MOTOR & CONTROL DIVISION, ROCKFORD, ILL., U.S.A.

TITLE: D.C. MOTOR, TEFC (FOR TACHOMETER ADAPTER KIT) (3)

CUSTOMER: GENERAL SALES

CATALOG LISTING: SRF3736-4983-84-5-56BC-CU

Printed By: FLYOL Dwg: SRF3736_4983845568BCCDate:06/22/2000 11:20:18