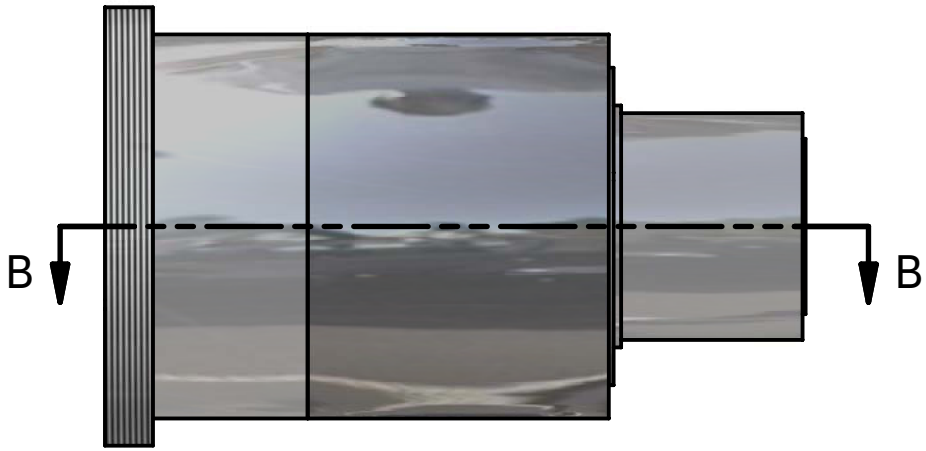

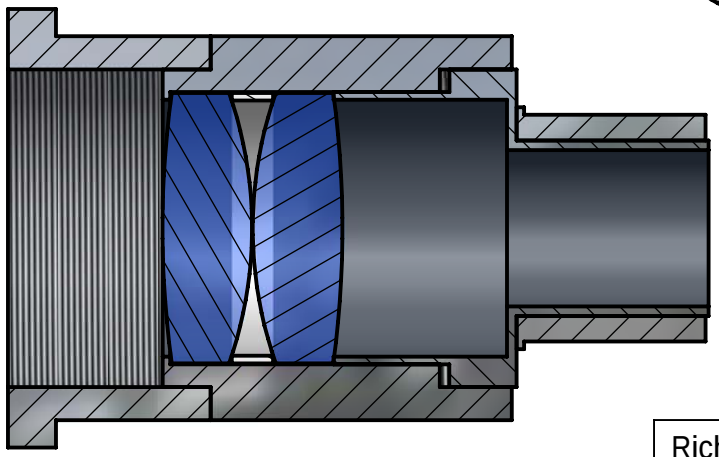

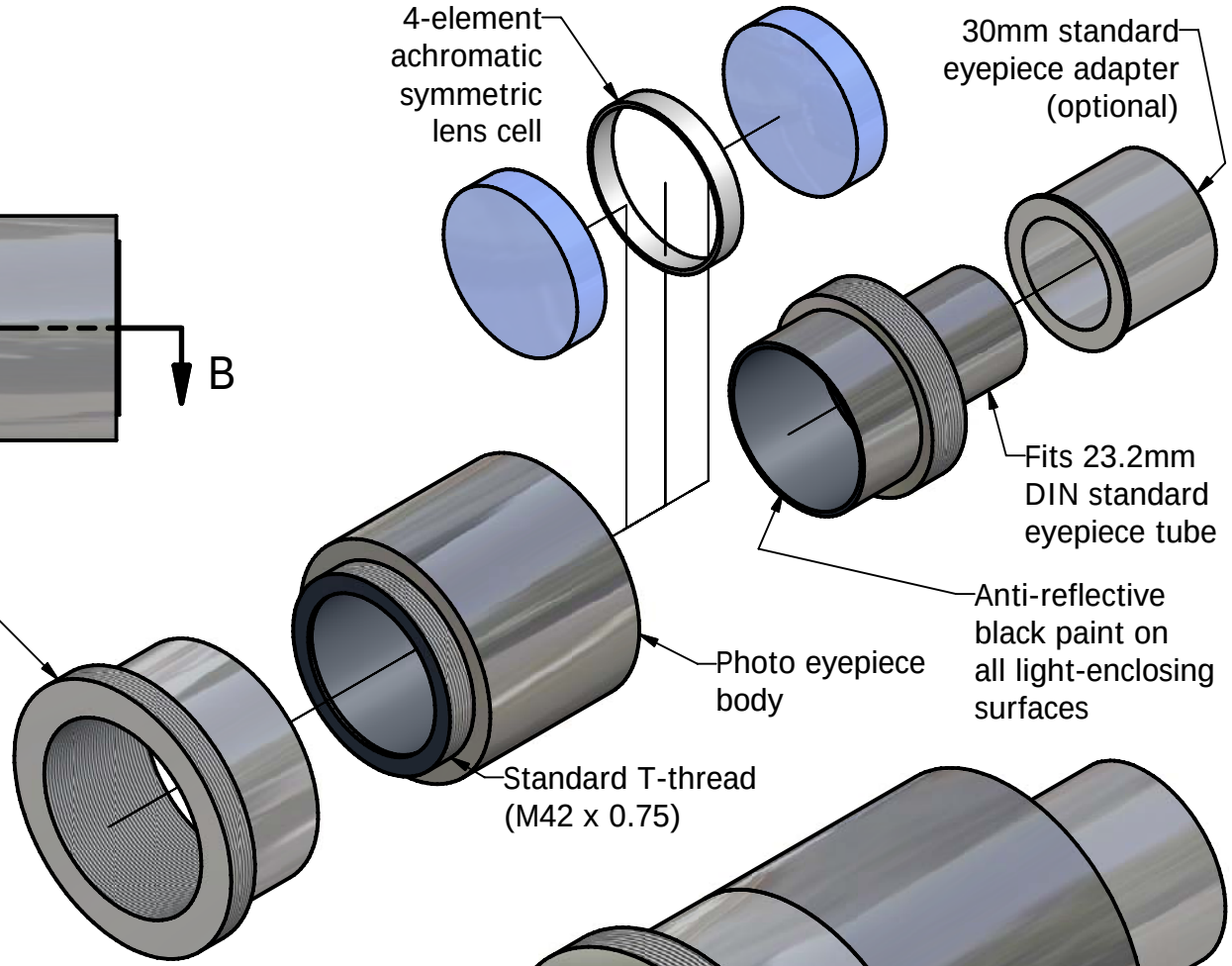

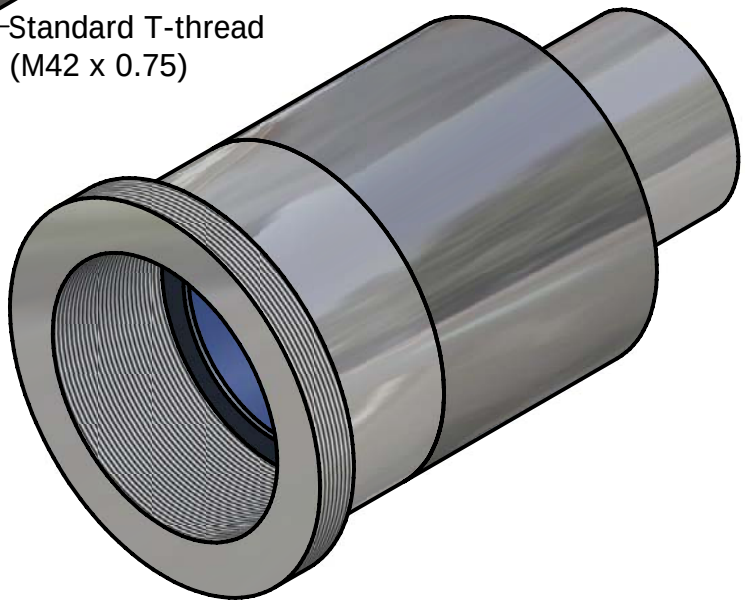

Richard J Kinch, PhD -- Palm Beach County, Florida USA -- http://www.truetex.com
photo_eyepiece_ach36mmx85mm_58mm_23mm.idw